PANEL-A

LOAD SERVED	CKT #	TYPE	BKR TRIP	WIRE SIZE	PHASE A	PHASE B	PHASE C	PHASE C	PHASE B	PHASE A	BKR TRIP	WIRE SIZE	TYPE	CKT #	LOAD SERVED
	1		20	#12	2200			1955			150	#3		12	Malvern™ bottling systems
Grist Mill Mallorcal III MDBA	1		20	#12		2200			220		150	#3		14	Adjustable Case Sealer
	1		20	#12			2200			1720	150	#10		16	
ABS Commertial	3		20	#12		650			1720		150	#10		18	OPERATION MANUAL PARADIGM 700/S
	5		20	#12	1340			1720			150	#10		20	
DEPALLETIZER	7		20	#14		1340			1300		150	#10		22	cold storage
	9		20	#14			1340								
TOTAL VA PHASE A					3540					1720					5260
TOTAL VA PHASE B						4190			3240						7430
TOTAL VA PHASE C							3540	3675							7215
TOTAL VOLT-AMPS															19905
DIVIDE TOTAL VOLT-AMPS BY SYSTEM VOLTAGE (PHASE TO PHASE)									208		AMPS				96
DIVIDE TOTAL AMPS BY THREE PHASE MULTIPLIER									1.73		AMPS				56
TOTAL CONNECTED LOAD (AMPS) @ 125%									70						
MAIN TYPE AND AMPERE RATING									100 AMP MCCB						
PANEL FEEDER SIZE – SEE RISER DIAGRAM															

PANEL-B

LOAD SERVED	CKT #	TYPE	BKR TRIP	WIRE SIZE	PHASE A	PHASE B	PHASE C	PHASE B	PHASE A	BKR TRIP	WIRE SIZE	TYPE	CKT #	LOAD SERVED
	1		20	#12	3670			300			150	#3		12	Brite Tank Monitor
stationary chiller	3		20	#12		3670			1,200		150	#3		14	Cellar Control Panel
	5		20	#12			3670			3,730	150	#10		16	Malt Cracker
	7		20	#14	1000				2560		150	#10		18	
brewCAn30 Canning	9		20	#14	1000			2560			150	#10		20	Brewhouse Control Panel
			20	#14		1000		2560			150	#10		22	
TOTAL VA PHASE A					4670					3730					8400
TOTAL VA PHASE B						5670			6320						11990
TOTAL VA PHASE C							3670	2860							6530
TOTAL VOLT-AMPS															26920
DIVIDE TOTAL VOLT-AMPS BY SYSTEM VOLTAGE (PHASE TO PHASE)									208		AMPS				130
DIVIDE TOTAL AMPS BY THREE PHASE MULTIPLIER									1.73		AMPS				76
TOTAL CONNECTED LOAD (AMPS) @ 125%									95						
MAIN TYPE AND AMPERE RATING									100 AMP MCCB						
PANEL FEEDER SIZE – SEE RISER DIAGRAM															

ELECTRICAL PANEL-MAIN

LOAD SERVED	CKT #	TYPE	BKR TRIP	WIRE SIZE	PHASE A	PHASE B	PHASE C	PHASE B	PHASE A	BKR TRIP	WIRE SIZE	TYPE	CKT #	LOAD SERVED
PANEL A	3		20	#12	100			9380			150	#3		12	HVAC
PANEL B	3		20	#12		100			9380		150	#3		14	
WATER HEATER	5		20	#12			2000			9380	150	#3		14	
TOTAL VA PHASE A					100					9380					9480
TOTAL VA PHASE B						100			9380						9480
TOTAL VA PHASE C							2000	9380							11380
TOTAL VOLT-AMPS															30340
DIVIDE TOTAL VOLT-AMPS BY SYSTEM VOLTAGE (PHASE TO PHASE)									208		AMPS				146
DIVIDE TOTAL AMPS BY THREE PHASE MULTIPLIER									1.73		AMPS				85
TOTAL CONNECTED LOAD (AMPS) @ 125%									107						
MAIN TYPE AND AMPERE RATING									120 AMP MCCB						
PANEL FEEDER SIZE – SEE RISER DIAGRAM															

KEY		DESCRIPTION	LOAD	CKT	BKR TRIP	WIRE SIZE
1		Brewhouse Control Panel	Approx 32.4 A			
	1a	PTC Temperature Sensors	N/A			
	1b	Lauter Tun Rake Drive	1.5 hp 6.1 A			
	1c	Vessel Lamps	15 Watt each			
	1d	Lauter Pump	1.5 HP 6.1 A			
	1e	Kettle Pump	3 HP 12.1 A			
	1f	Whirlpool Pump	2 HP 8.1 A			
	1g	Grant Level Control Probe	N/A			
Brewhouse Control Panel					32.4 A	
TOTAL CONNECTED LOAD (AMPS) @ 125%					40.5 A	
MAIN TYPE AND AMPERE RATING					50 A	
PANEL FEEDER SIZE – SEE RISER DIAGRAM						

120/240 VOLT SINGLE PHASE 2 WIRE ELECTRICAL SERVICE				
ITEM	CONN. LOAD (VA)	DEMAND F.	DEMAND LOAD (WATTS)	TOTAL (AMPS)
LIGHTING	4780	125%	5980	
WATER HEATERS	2500	100%	2500	
EQUIPMENT	46825	65%	30437	
HVAC LOADS	28136	100%	28136	
SUB-TOTAL			66553	
LARGEST MOTOR	0	125%	0	
TOTAL @ 120/208 V	81741		66553	617

1 E-200 PANEL SCHEDULE & SERVICE CALCULATION

Material	
Name	Watt
CEILING MOUNT ROUND LED LIGHT	20W
WALL MOUNT LED LIGHT	10W
CEILING MOUNT 2"X2" SQUARE LED LIGHT	40W
HANGING LIGHT	20W

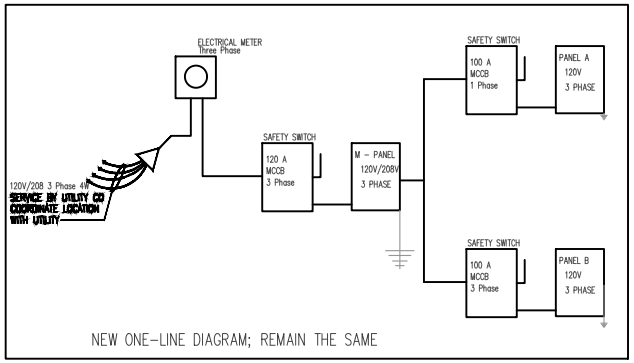

1 E-200 SINGLE LINE DIAGRAM

ENGINEER'S TEAM
430 E 8TH ST STE 8017
HOLLAND MI 49423
ENGRTEAM.COM
SUPPORT@ENGRTEAM.COM

OWNER:

SECOND PROJECT

1166 NW 104th
St Miami FL 33150

SEAL:

Release for construction

ELECTRICAL LOAD SCHEDULE PLAN

Drawn by: Engr. Al Amin
Checked:
Date: DEC, 24.

E. 3

Scale: 1:100